Fichier:R0015246 Fit Hepco Drive Beam Cylinder Screenshot 2023-07-12 094109.png

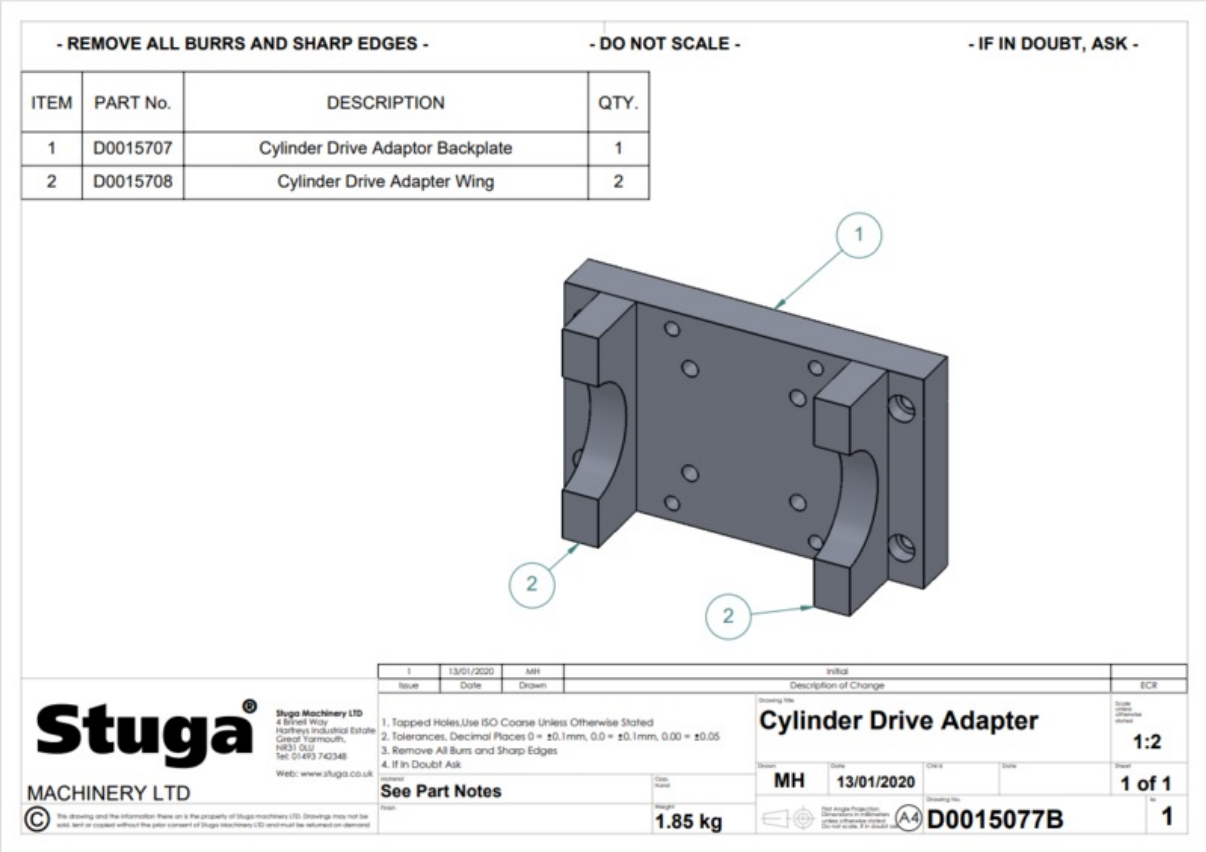

Size of this preview:800 × 566 pixels.

Original file (1,123 × 795 pixels, file size: 151 KB, MIME type: image/png)
R0015246_Fit_Hepco_Drive_Beam_Cylinder_Screenshot_2023-07-12_094109

File history

Click on a date/time to view the file as it appeared at that time.

	Date/Time	Thumbnail	Dimensions	User	Comment
current	**10:42, 12 July 2023**		1,123 × 795 (151 KB)	Gareth Green (talk | contribs)	R0015246_Fit_Hepco_Drive_Beam_Cylinder_Screenshot_2023-07-12_094109

You cannot overwrite this file.

File usage

The following page links to this file:

R0015246 Fit Hepco Drive Beam Cylinder

Metadata

This file contains additional information, probably added from the digital camera or scanner used to create or digitize it. If the file has been modified from its original state, some details may not fully reflect the modified file.

Horizontal resolution	37.79 dpc
Vertical resolution	37.79 dpc